MICROPROCESSOR INTERFACING SCHEMATIC DIAGRAM
(Part of Transmitter Schematic Diagram).

EXICOM - RT85C

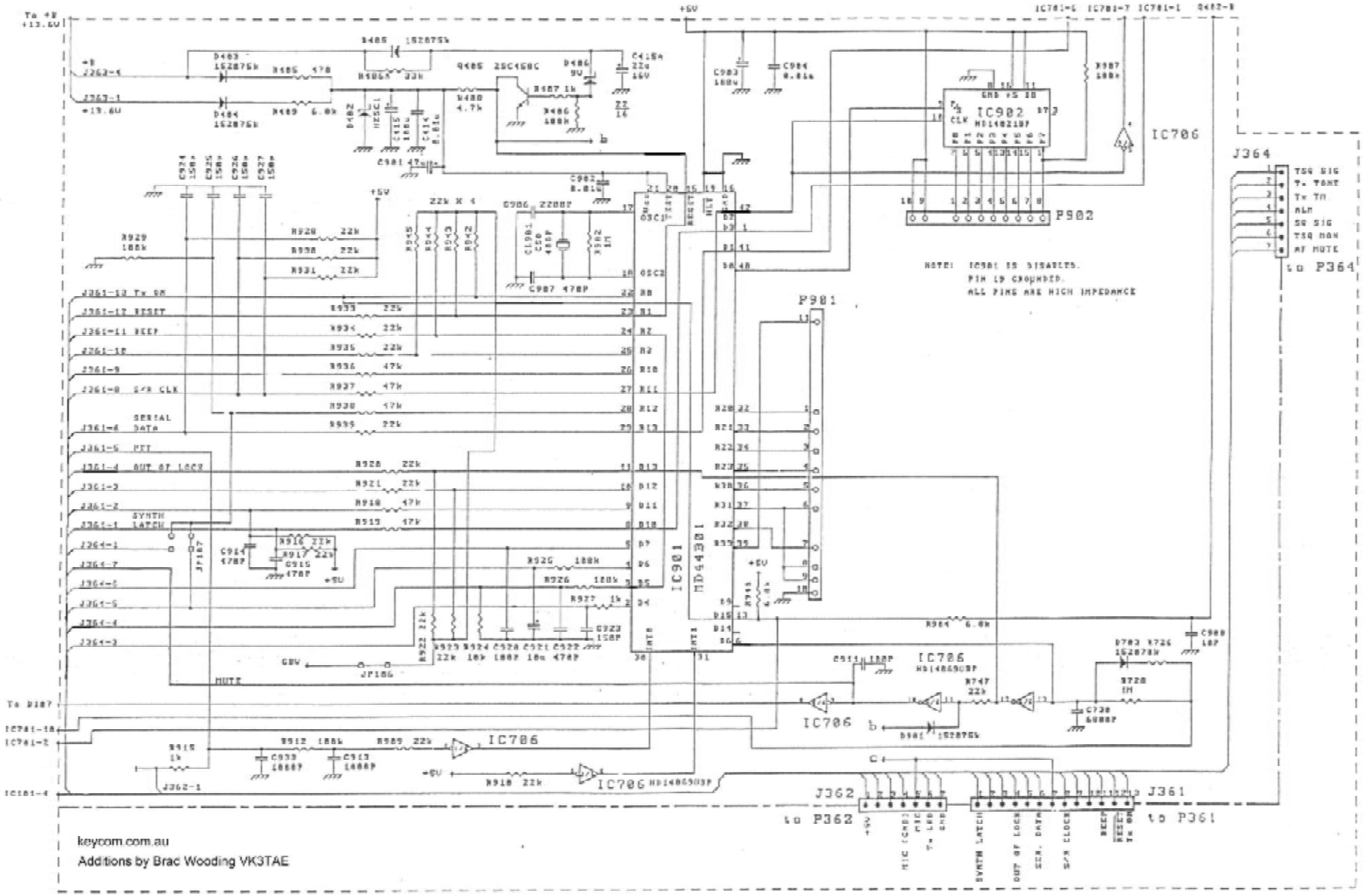

keycom.com.au

Additions by Brac Wooding VK3TAE